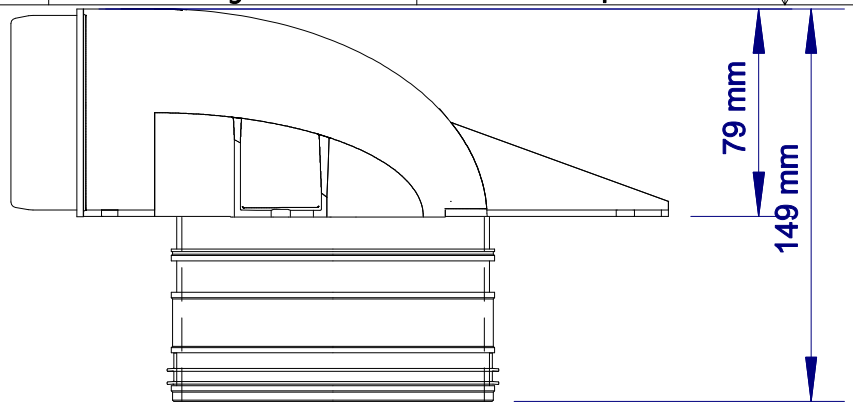

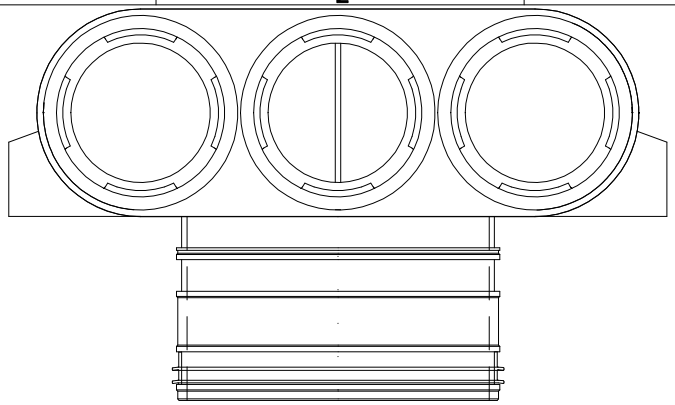

aansluithuls

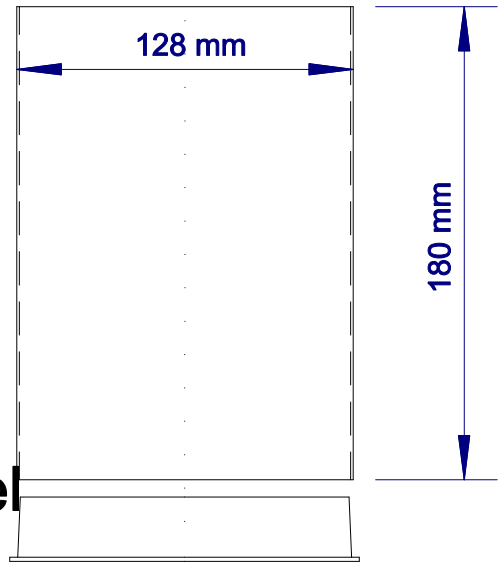

specie deksel

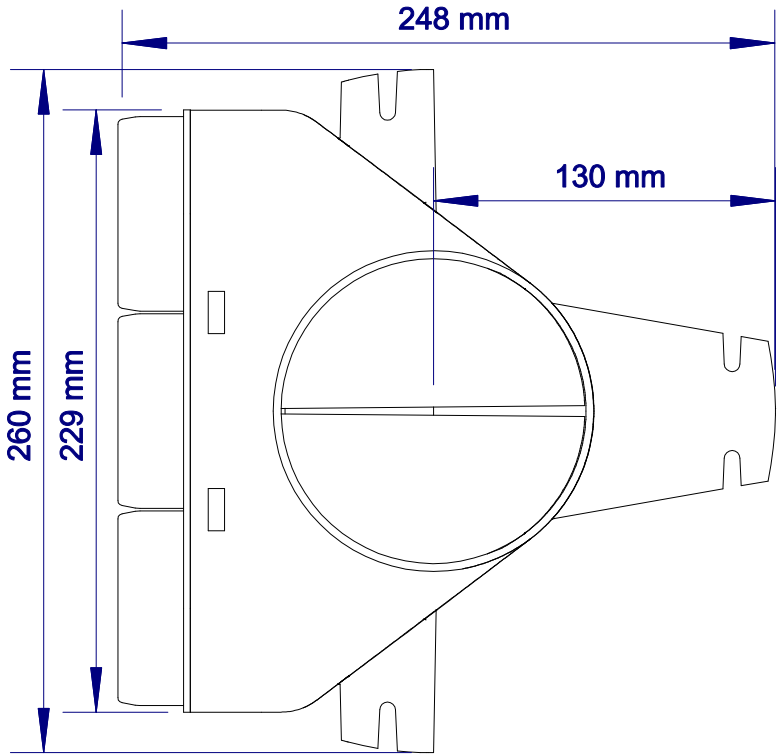

Designed by	Checked by	Approved by	Date		Date	
					Edition	Sheet 1 / 1